Total Protection Solutions

TransTrack® 2 100

System Features



- Protects facilities and equipment against the harmful effects of lightning strikes and internally generated electrical transients
- Individually fused MOV's provide superior protection and continuous operation
- 200 kAIC short circuit current rating allows direct bus connection without the need of an upstream over-current protection device
- Includes pre-wired pigtail conductors to stream line installation
- Low profile design has an optional flush-mount plate for in-wall recessed panel applications
- UL 1283 EMI/RFI filter
- Ultra Compact Footprint – makes installation flexible
- Enhanced Transient Filter for better protection of electronic loads
- 25-Year Unlimited Free Replacement Warranty
- Status indicator lights (LED)

Product Specifications

General Specifications

Maximum Rated Surge Current: 100kA per phase (50kA/mode)
Repetitive Surge Current Rating: 3,000 impulses per mode based on actual test data (using ANSI/IEEE C62.41.1-2002 C3 combo wave)
Application: ANSI/IEEE C62.41 Location C, B & A. Ideal for distribution panels, branch panels and critical loads
Design: Hybrid parallel design with individual fused MOV's and UL 1283 EMI/RFI filter
Warranty: 25-Year Unlimited Free Replacement
Safety Listing: UL 1449 4th Ed., Type 1 for Type 1 & Type 2 locations and UL 1283

Electrical Specifications

Modes of Protection: All modes: L-N, L-G, N-G & L-L
Input Power Frequency: 47-63Hz
Connection Method: Parallel to electrical distribution system
Response Time: Less than 1 nanosecond
Standard Monitoring: Status indicator lights (one per phase)
Short circuit Current Rating: 200 kAIC – no upstream over-current protection device (breaker or fuse) required.

Mechanical Specifications

Dimensions (approx.): 6"H x 6"W x 4"D
(160 mm H x 160 mm W x 102 mm D)
Enclosure: Powder coated, impact-resistance steel, weather-proof NEMA 4 (IP56)
Connection: Pre-wired with 30"(915 mm) of #10 AWG (5.26 mm^2) conductor
Mounting: Dual mounting flanges
Operating Environment: -40° C to 70° C (-40° F to 160° F)
5% to 95% non-condensing humidity
Weight: 10 lbs. (4.5 kg)

FREE REPLACEMENT ★25 YEAR★ WARRANTY ★25 YEAR★

INTERTEK ETL LISTED C US
UL 1449

Available Configurations

Model Number	Description
TK-TT2-100-1P120-FL	120VAC, Single-Phase 2-wire + grd
TK-TT2-100-1P240-FL	240VAC, Single-Phase 2-wire + grd
TK-TT2-100-1S240-FL	120/240VAC, Split-Phase, 3-wire + grd
TK-TT2-100-3Y208-FL	120/208VAC, Three-Phase, 4-wire + grd
TK-TT2-100-3Y380-FL	220/380VAC, Three-Phase, 4-wire + grd
TK-TT2-100-3Y480-FL	277/480VAC, Three-Phase, 4-wire + grd
TK-TT2-100-3D240-FL	120/240VAC, 3ø high-leg DELTA, 4-wire + grd (B phase must be 208V)
TK-TT2-100-240NN-FL	240VAC, Three-Phase, 3-wire + grd

Available Options

- Monitoring package (Form C dry relay contacts + audible alarm with mute button) : add suffix "-M"

Stand-Alone Option *(To Be Ordered as a separate Item)*

- TT2-FMP Flush-Mount Plate Kit

EMI / RFI Filter Attenuation – Mil Standard 220B

Max. Attenuation Frequency
40 dB @ 100 kHz

Made in U.S.A.

Total Protection Solutions™

TransTrack® 2 100

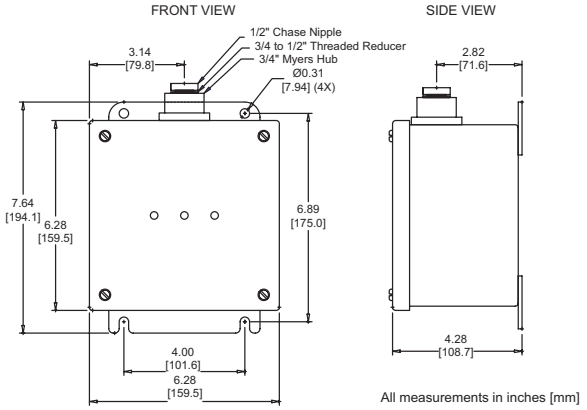

All measurements in inches [mm]

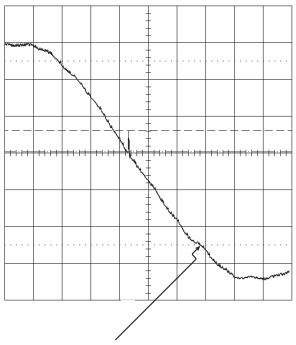

Peak Let-Through Voltage Level - 36V

Reference Level Zero Crossing of AC Sine Wave

AC Sine Wave

For 120/208V Configuration

ANSI/IEEE C62.41.1 Category A1 Ring Wave 2000V, 67A Test Plot
L-N Mode, Dynamic, 180 Phase Angle, 6" Leads, Positive Polarity 1 msec/div Horizontal 45V/div Vertical

					ANSI/IEEE C62.41.1-2002, C62.41.2-2002, & C62.45-2002 Measured Limited Voltage			UL Voltage Ratings
Model Number	**System Voltage**	**System Configuration**	**Protection Mode**	**MCOV**	**A1 Ring Wave 2kV, 67A 180° Phase Angle**	**B3/C1 Impulse Wave 6kV, 3kA 90° Phase Angle**	**C3 Impulse Wave 20kV, 10kA 90° Phase Angle**	**UL 1449 2nd Edition/ UL1449 3rd & 4th Ed. Voltage Protection Ratings**
TK-TT2-100-P120-FL	120V	1-Phase 2-wire+grnd	L-N	150V	42V	590V	970V	400/600
			L-G	150V	541V	597V	1160V	400/600
			N-G	150V	765V	590V	1100V	400/600
TK-TT2-100-1P240-FL	240V	1-Phase 2-wire+grnd	L-N	320V	42V	1038V	1660V	800/1200
			L-G	320V	541V	1037V	1690V	800/1200
			N-G	320V	765V	1037V	1510V	800/1200
TK-TT2-100-1S240-FL	120/240V	Split-Phase 3-wire+grnd	L-N	150V	36V	590V	970V	400/600
			L-G	150V	283V	597V	1160V	400/600
			L-L	300V	56V	980V	1490V	800/1000
			N-G	150V	322V	590V	1100V	400/600
TK-TT2-100-3Y208-FL	120/208V	3-Phase WYE 4-wire+grnd	L-N	150V	36V	590V	970V	400/600
			L-G	150V	283V	597V	1160V	400/600
			L-L	300V	56V	980V	1490V	800/1000
			N-G	150V	322V	590V	1100V	400/600
TK-TT2-100-3Y380-FL	220/380V	3-Phase WYE 4-wire+grnd	L-N	320V	42V	1040V	1660V	800/1200
			L-G	320V	541V	1037V	1690V	800/1200
			L-L	640V	63V	1860V	2570V	1500/2000
			N-G	320V	765V	1035V	1510V	800/1200
TK-TT2-100-3Y480-FL	277/480V	3-Phase WYE 4-wire+grnd	L-N	320V	42V	1040V	1660V	800/1200
			L-G	320V	541V	1037V	1690V	800/1200
			L-L	640V	63V	1860V	2570V	1500/2000
			N-G	320V	765V	1035V	1510V	800/1200
TK-TT2-100-3D240-FL	120/240V	3-Phase high-leg DELTA 4-wire+grnd	L-N	150V	36V	598V	960V	400/600
			H-N	320V	39V	1041V	1326V	800/1200
			L-G	150V	283V	595V	1160V	400/600
			H-G	320V	735V	1042V	1495V	800/1200
			L-L	320V	31V	988V	1490V	800/1000
			H-L	470V	71V	1394V	1629V	1500/1500
			N-G	150V	303V	595V	860V	400/600
TK-TT2-100-240NN-FL	240V	3-Phase DELTA 3-wire+grnd	L-G	320V	525V	1039V	1500V	800/1200
			L-L	300V	70V	978V	1300V	800/1000

All tests performed with 6" (152 mm) lead length, positive polarity.
All voltages are peak values (±10%) measured from the zero reference point at the phase angles referenced above using a 10 µs/div display rate and 500 Mega samples/sec sampling rate.
Specifications subject to change without notice. See web site www.TPSsurge.com for latest revisions.

©2018 Total Protection Solutions, LLC
TransTrack® and Total Protection for life® are registered trademarks of Total Protection Solutions, LLC

For Technical Support:
TEL: 800.647.1911 www.TPSsurge.com
P.O. Box 3760, Winter Park, FL 32790-3760