PanelTrack-R

SYSTEM FEATURES



- Protects sensitive electronic and electrical equipment against the harmful effects of lightning strikes and internally generated electrical transients
- Includes pre-wired pigtail conductors to streamline installation
- Fail-safe design
- Component Level Fusing (CLF) provides over-current plus thermal protection for added safety
- UL 1449 4th Edition
- Small, compact footprint - makes installation flexible
- 10-Year Unlimited Free Replacement Warranty
- Optional flush mount plate for installation on recessed panels

PRODUCT SPECIFICATIONS

General Specifications:

Maximum Rated Surge Current: 50kA /phase
Application: ANSI/IEEE C62.41 Location C, B & A. Ideal for service entrance and branch panel applications
Design: Ultra compact, fail-safe design. Component-level fusing provides thermal and overcurrent protection.
Warranty: 10-Year Unlimited Free Replacement
Safety Listing: UL 1449 4th Ed., Type 1 SPD for Type1 & Type 2 locations. No external overcurrent protection required.
Nominal Discharge Surge Current I_n: 20kA

Electrical Specifications:

Modes of Protection: All modes. L-N, L-L, L-G & N-G
Discreet protection: WYE L-N & N-G, DELTA L-G & L-L
Input Power Frequency: 40-440 Hz
Response Time: < 1 nanosecond
Standard Monitoring: Status indicator light (one per phase)
Short Circuit Current Rating (SCCR): 100kAIC for all units. Type 1 SPD's do not require any upstream over current protection, so unit can be installed direct to the bus or on any size breaker or fuse.

Mechanical Specifications:

Dimensions: Approx. 3"H x 3.5"W x 3"D (74mm H x 90mm W x 79mm D)
Enclosure: High-impact non-metallic Nema 4X
Connection: Pre-Wired with 33" (838 mm) of #12 AWG (3.31mm2) conductor
Mounting: Comes with a threaded 1/2" (15 mm) hub for easy knockout mounting
Operating Environment: -40° C to 70° C (-40° F to 160° F); 5% to 95% non-condensing humidity
Weight: 2.15 lbs (1.0kg)

Options: Flush mount cover plate: PKR-FMP
Order part # TK-PK050R-DIN-KIT for din rail mounting bracket.

PanelTrack Recessable

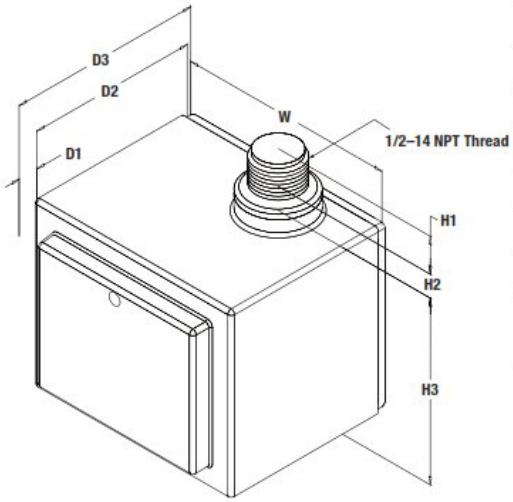

H1	.75 (19.1)
H2	.25 (6.4)
H3	2.93 (74.4)
W	3.56 (90.4)
D1	.32 (8.1)
D2	2.78 (70.6)
D3	3.10 (78.7)
All measurements in inches (mm)	

MADE IN USA

©2018 Total Protection Solutions, LLC
PanelTrack® and Total Protection for Life®
are registered trademarks of Total Protection Solutions LLC

For Technical Support:
TEL: 800.647.1911 www.tpssurge.com
P.O. Box 3760, Winter Park, FL 32790

PanelTrack-R

AVAILABLE CONFIGURATIONS

						ANSI/IEEE C62.41.1-2002, C62.41.2-2002, & C62.45-2002			
						Measured Limited Voltage			VPR Data
						All Models	All Models	All Models	UL1449 4th Ed.
Model Number	System Voltage	System Configuration	Surge Rating per phase	Protection Mode	MCOV	A3 Ring Wave 6kV, 200A 90° Phase Angle	B3/C1 Impulse Wave 6kV, 3kA 90° Phase Angle	C3 Impulse Wave 20kV, 10kA 90° Phase Angle	Voltage Protection Ratings
TK-PK050R-1P120-L	120V	1-Phase 2-wire+grnd	50kA	L-N	150	374	629	1015	700
				N-G	150	476	650	1110	700
TK-PK050R-1P240-L	240V	1-Phase 2-wire+grnd	50kA	L-N	320	760	1020	1330	1200
				N-G	320	767	1020	1400	1200
TK-PK050R-1P277-L	277V	1-Phase 2-wire+grnd	50kA	L-N	320	767	1020	1350	1200
				N-G	320	774	1070	1370	1200
TK-PK050R-1S240-L	120/240V	1-Phase 3-wire+grnd	50kA	L-N	150	374	629	1015	700
				N-G	150	476	650	1110	700
TK-PK050R-1S480-L	277/480V	2-Phase 3-wire+grnd	50kA	L-N	320	767	1020	1350	1200
				N-G	320	774	1070	1370	1200
TK-PK050R-3Y208-L	120/208V	3-Phase WYE 4-wire+grnd	50kA	L-N	150	450	629	953	700
				N-G	150	423	650	950	700
TK-PK050R-3Y380-L	220/380V	3-Phase WYE 4-wire+grnd	50kA	L-N	320	762	1020	1350	1200
				N-G	320	793	1070	1370	1200
TK-PK050R-3Y400-L	230/400V	3-Phase WYE 4-wire+grnd	50kA	L-N	320	762	1020	1350	1200
				N-G	320	793	1070	1370	1200
TK-PK050R-3Y415-L	240/415V	3-Phase WYE 4-wire+grnd	50kA	L-N	320	767	1020	1350	1200
				N-G	320	774	1070	1370	1200
TK-PK050R-3Y480-L	277/480V	3-Phase WYE 4-wire+grnd	50kA	L-N	320	767	1020	1350	1200
				N-G	320	774	1070	1370	1200
TK-PK050R-3Y600-L	347/600V	3-Phase WYE 4-wire+grnd	50kA	L-N	420	790	1260	1690	1500
				N-G	420	798	1280	1680	1500
TK-PK050R-3D240-L	120/240V	3-Phase high-leg DELTA 4-wire+grnd	50kA	L-N	150	550	680	1073	700
				H-N	320	793	1070	1370	1200
				N-G	150	550	680	1073	700
TK-PK050R-240NN-L	240V	3-Phase DELTA 3-wire+grnd	50kA	L-L	300	778	1020	1540	1200
				L-G	300	799	1020	1587	1200
TK-PK050R-380NN-L	380V	3-Phase DELTA 3-wire+grnd	50kA	L-L	640	1553	1737	2957	2000
				L-G	640	1600	2070	2983	2500
TK-PK050R-400NN-L	400V	3-Phase DELTA 3-wire+grnd	50kA	L-L	640	1553	1737	2957	2000
				L-G	640	1600	2070	2983	2500
TK-PK050R-480NN-L	480V	3-Phase DELTA 3-wire+grnd	50kA	L-L	640	1553	1791	2457	2000
				L-G	640	1600	1920	2483	2500
TK-PK050R-600NN-L	600V	3-Phase DELTA 3-wire+grnd	50kA	L-L	840	1765	2200	2643	2500
				L-G	840	1835	2590	2657	3000

MADE IN USA

All tests performed with 6" (152 mm) lead length, postive polarity. All voltages are peak values (±10%) measured from the zero reference point at the phase angles referenced above using a 10 µs/div display rate and 500 Mega samples/sec sampling rate.

Specifications subject to change without notice. See web site, www.TPSurge.com for latest revisions.

©2018 Total Protection Solutions, LLC
PanelTrack® and Total Protection for Life®
are registered trademarks of Total Protection Solutions LLC

For Technical Support:
TEL: 800.647.1911 www.tpssurge.com
P.O. Box 3760, Winter Park, FL 32790